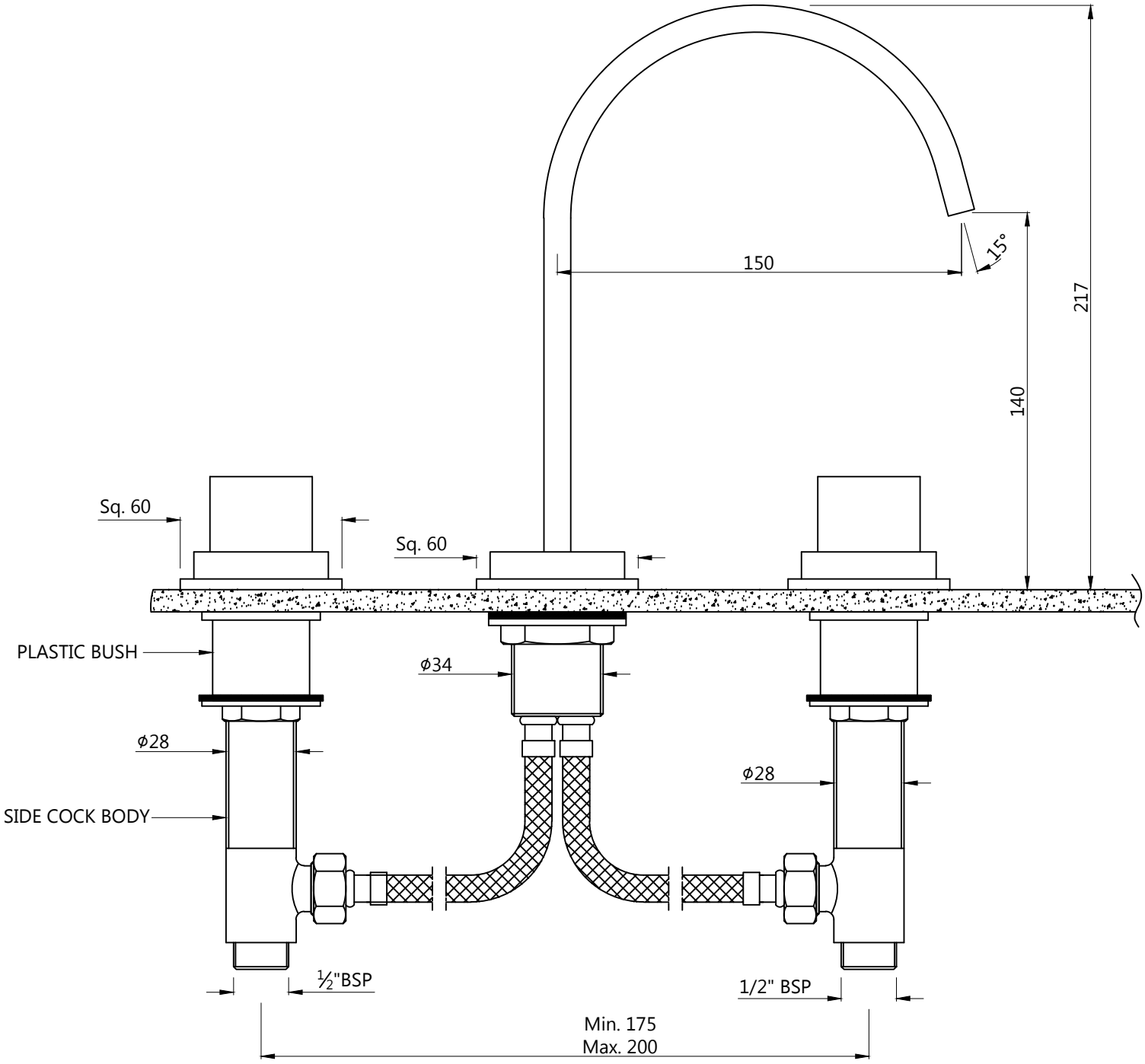3 - Hole Basin Mixer without Popup Waste System	Cat. No.-CEL-47189